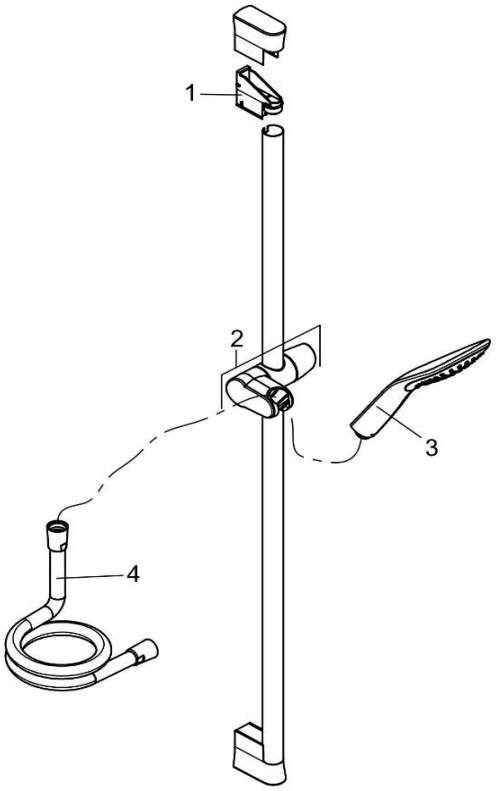

6764005-00		Brausegarnitur	Shower Combination
1	93100805-00	WANDHALTER / Streichung	WALLHOOK / Deletion
2	7300305-00	GLEITSCHIEBER	GILDER
3	6760005-00	HANDBRAUSE	HANDSHOWER
4	6107205-00	BRAUSESCHLAUCH	SHOWER HOSE